1853641
Shanghai Chest
Parts List

A.	Top Assembly	1 pc
B.	Left Side Assembly	1 pc
C.	Right Side Assembly	1 pc
D.	Front Stretcher	1 pc
E.	Back Stretcher	1 pc
F.	Bottom Panel	1 pc
G.	Back Panel	1 pc
H.	Left Door	1 pc
I.	Right Door	1 pc
J.	Adjustable Shelf	1 pc
K.	Front Panel of Drawer	1 pc
L.	Left Side Panel of Drawer	1 pc
M.	Right Side Panel of Drawer	1 pc
N.	Back Panel of Drawer	1 pc
O.	Bottom Panel of Drawer	1 pc
P.	Drawer Stoppers	2 pcs
Q.	Shelf Pins	4 pcs
R.	Long Phillips Head Screws	8 pcs
S.	Short Phillips Head Screws	14 pcs
T.	Connecting Bolts	8 pcs
U.	Eccentric Cams	8 pcs
V.	Plastic Caps	8 pcs
W.	Allen Head Bolts	4 pcs
X.	Lock Washers	4 pcs
Y.	Flat Washers	4 pcs
Z.	Allen Head Wrench	1 pc
ZA.	Phillips Head Screwdriver	1 pc
ZB.	Flat Head Screwdriver	1 pc

1853641
Shanghai Chest

∗ Please make sure that you have all the parts and hardware indicated above before you begin assembly of this item.
∗ Use the hardware illustrations to determine correct piece and size.
∗ This item should be assembled on a soft surface to prevent scratching the finish during assembly.
∗ This item may require periodic tightening.

Hardware Illustrations

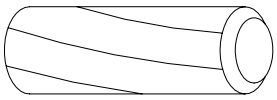

P. Drawer Stopper

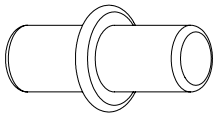

Q. Shelf Pin

R. Long Phillips Head Screw

S. Short Phillips Head Screw

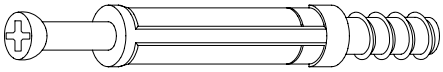

T. Connecting Bolt

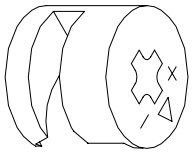

U. Eccentric Cam

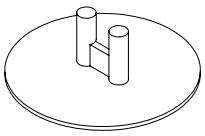

V. Plastic Cap

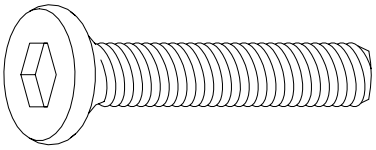

W. Allen Head Bolt

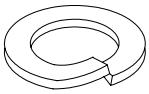

X. Lock Washer

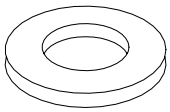

Y. Flat Washer

1853641
Shanghai Chest

Attach Front & Back Stretchers, Top Assembly, Bottom Panel & Doors

Parts required

A.	Top Assembly	1 pc	U.	Eccentric Cams	4 pcs
C.	Right Side Assembly	1 pc	V.	Plastic Caps	4 pcs
D.	Front Stretcher	1 pc	W.	Allen Head Bolts	2 pcs
E.	Back Stretcher	1 pc	X.	Lock Washers	2 pcs
F.	Bottom Panel	1 pc	Y.	Flat Washers	2 pcs
H.	Left Door	1 pc	Z.	Allen Head Wrench	1 pc
I.	Right Door	1 pc	ZA.	Phillips Head Screwdriver	1 pc
T.	Connecting Bolts	4 pcs	ZB.	Flat Head Screwdriver	1 pc

1. **Attach Connecting Bolts (T)** Align the exposed threads on the Connecting Bolts (T) with the pre-threaded holes in the Right Side Assembly (C). Tighten by turning in a clockwise direction using Phillips Head Screwdriver (ZA). See Illustration #1.
2. **Attach Front & Back Stretchers (D, E) & Bottom Panel (F)** Align the Connecting Bolts (T) with the pre-drilled holes in the Front & Back Stretchers (D, E). Be sure that the dowels on the ends of Front & Back Stretcher (D, E) align with the holes in the Right Side Assembly (C). **Note: Door axis holes in the Bottom Panel (F) should face up and to the front at this step.** Insert the Eccentric Cams (U) into the pre-drilled holes in the Front, Back Stretchers (D, E) & Bottom Panel (F). Make sure the groove in the Eccentric Cams (U) faces out and the arrow points towards the Connecting Bolts (T). Use Flat Head Screwdriver (ZB) to adjust the Eccentric Cams (U) and to lock the inserted Connecting Bolts (T) in place by turning in a clockwise direction. Cover the Eccentric Cams (U) with Plastic Caps (V). See Illustration #1.
3. **Attach Top Assembly (A)** Align the pre-drilled holes in the rails under Top Assembly (A) with the pre-drilled holes in the top of Right Side Assembly (C). Be sure the dowels in the Top Assembly (A) align with the pre-drilled holes in the Right Side Assembly (C). At the same time, insert the metal axis in the Left & Right Doors (H, I) into the pre-drilled holes in the Top Assembly (A) & Bottom Panel (F). Secure Top Assembly (A) to Right Side Assembly (C) with Allen Head Bolts (W), Lock Washers (X) and Flat Washers (Y) using Allen Head Wrench (Z). See Illustration #1.

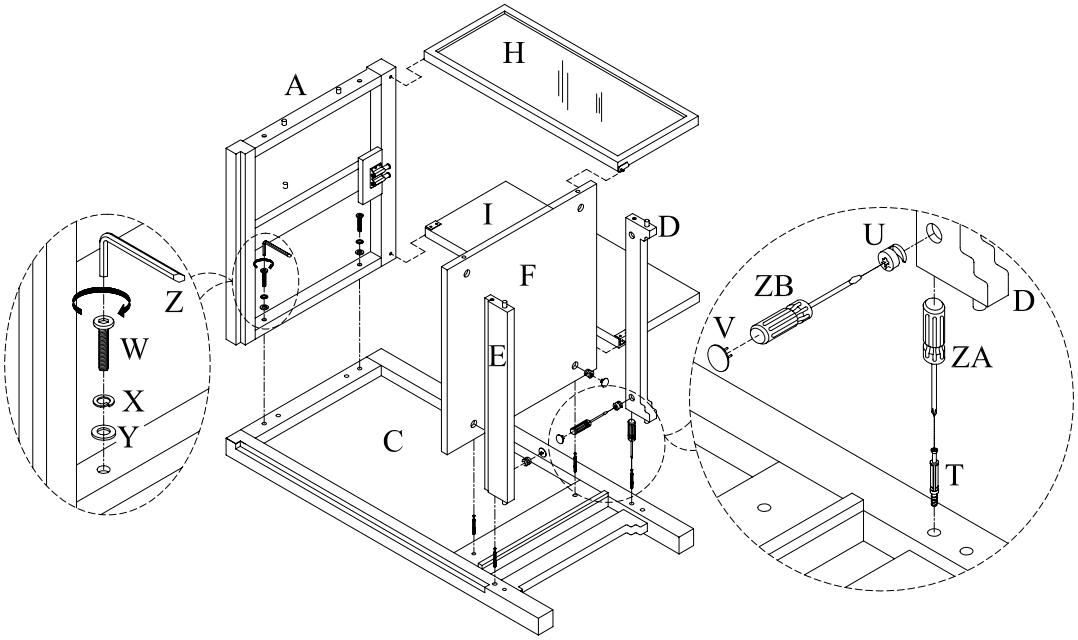

Illustration # 1

R1-9-23-04

1853641
Shanghai Chest

Attach Left Side Assembly

4. **Attach Left Side Assembly (B)** Refer to steps 1-3 to attach Front & Back Stretchers (D, E), Top Assembly (A), Bottom Panel (F) to Left Side Assembly (B). See Illustration #2.

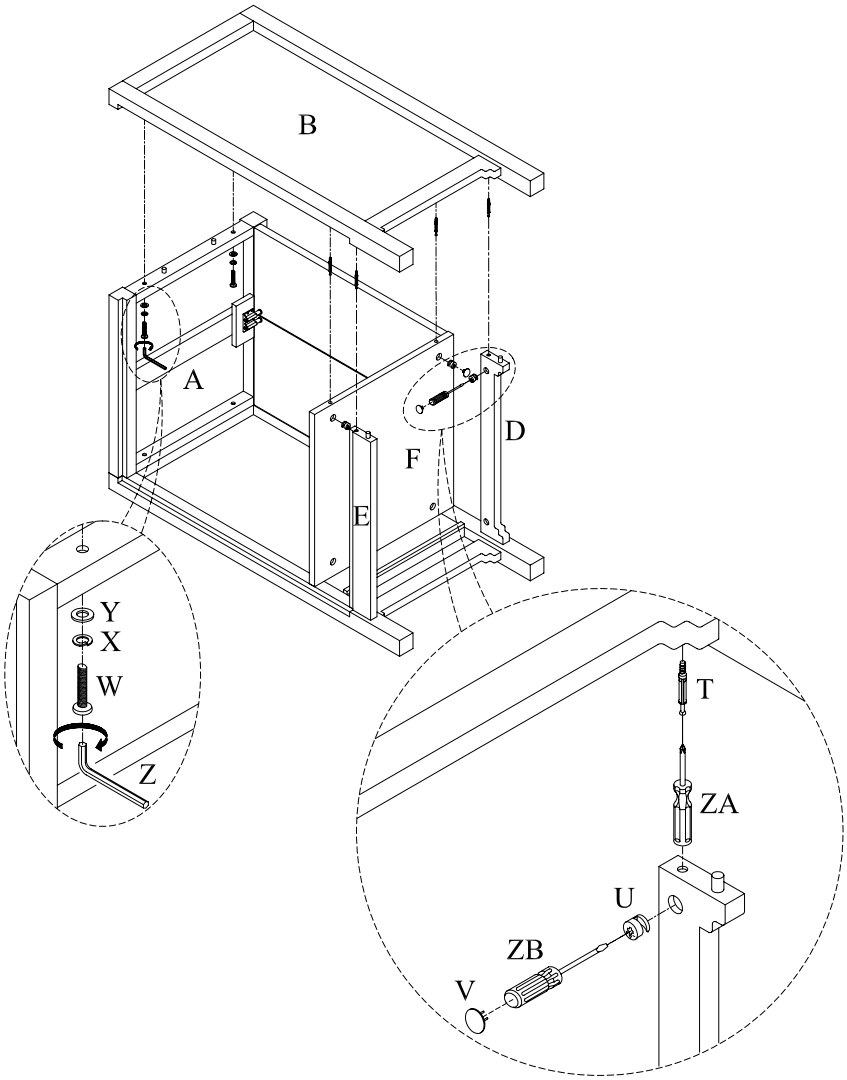

Illustration # 2

1853641
Shanghai Chest

Attach Back Panel & Adjustable Shelf & Assemble Drawer

Parts required

A.	Top Assembly	1 pc	M.	Right Side Panel of Drawer	1 pc
B.	Left Side Assembly	1 pc	N.	Back Panel of Drawer	1 pc
C.	Right Side Assembly	1 pc	O.	Bottom Panel of Drawer	1 pc
E.	Back Stretcher	1 pc	P.	Drawer Stoppers	2 pcs
G.	Back Panel	1 pc	Q.	Shelf Pins	4 pcs
J.	Adjustable Shelf	1 pc	R.	Long Phillips Head Screws	8 pcs
K.	Front Panel of Drawer	1 pc	S.	Short Phillips Head Screws	14 pcs
L.	Left Side Panel of Drawer	1 pc	ZA.	Phillips Head Screwdriver	1 pc

6. **Attach Back Panel (G)** Place the Back Panel (G) into the pre-cut groove in the Top Assembly (A), Left & Right Side Assemblies (B, C) and Back Stretcher (E). Secure with Short Phillips Head Screws (S) using Phillips Head Screwdriver (ZA). See Illustration #3.
7. **Attach Adjustable Shelf (J)** Insert the Shelf Pins (Q) into the desired pre-drilled holes in the Left & Right Side Assemblies (B, C). Put the Adjustable Shelf (J) on Shelf Pins (Q). See Illustration #3.
8 **Assemble the Drawer** Align the pre-drilled holes in the ends of Back Panel of Drawer (N) with the pre-drilled holes in the Left & Right Side Panels of Drawer (L, M). **Note: Grooves of the drawer panels should face inward and meet**. Secure with Long Phillips Head Screws (R) using Phillips Head Screwdriver (ZA). Insert the Bottom Panel of Drawer (O) into the grooves of the Side and Back Panels of Drawer (L, M, N). Align the pre-drilled holes in the Front Panel of Drawer (K) with the pre-drilled holes in the Left & Right Side Panels of Drawers (L, M). Secure with Long Phillips Head Screws (R) using the Phillips Head Screwdriver (ZA). See Illustration #3.
9. **Attach Drawer Stoppers (P)** Partially insert drawer into drawer space. Insert the Drawer Stoppers (P) into the pre-drilled holes in the Left & Right Side Panels (L, M). See Illustration #3.

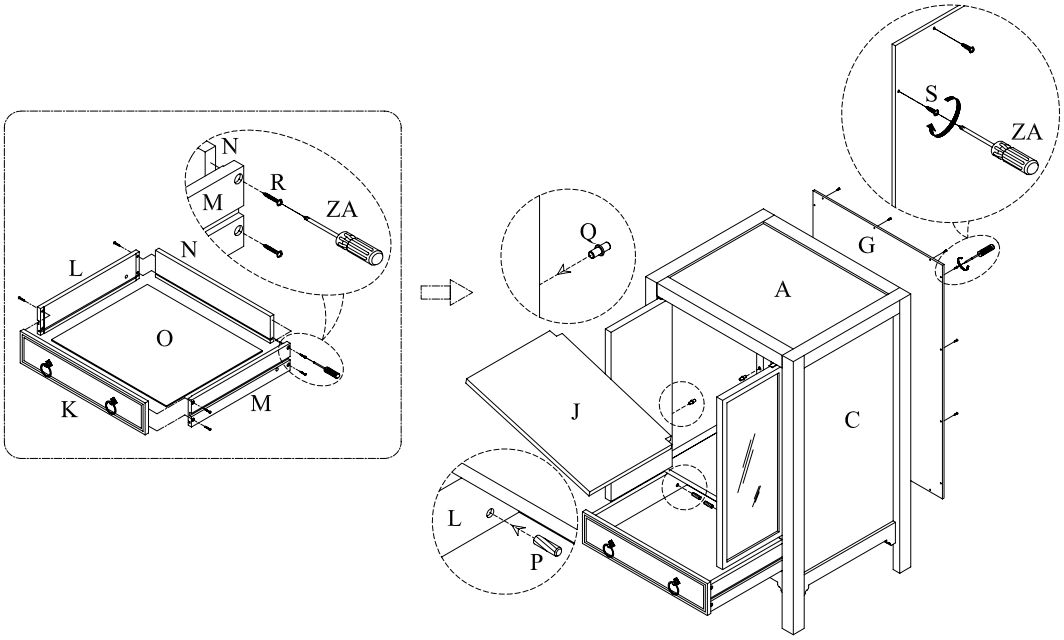

Illustration # 3

R1-9-23-04